MANUAL





Ceiling Mounted

Infrared Heater

With LED Lighting

Please refer to this manual for assistance with setting up and getting the most out of your LED ceiling mounted infrared heater.

THANK YOU FOR YOUR PURCHASE

CONTENTS

PAGE 3	GET TO KNOW YOUR REMOTE
PAGE 4 - 5	HOW TO PAIR YOUR REMOTE
PAGE 6	HOW TO PROGRAM YOUR CONTROLLER,
	HOW TO SET THE TIME,
PAGE 6 - 9	HOW TO PROGRAM YOUR HEATER
PAGE 10	HOW TO CONTROL THE LED LIGHTING,
PAGE 10 - 11	FAQ / TROUBLESHOOTING
PAGE 11	REMOTE FUNCTIONS
PAGE 12 - 16	INSTALLATION METHOD
PAGE 17 - 19	GYPSUM BOARD INSTALLATION
PAGE 19 - 20	TECHNICAL DATA

GET TO KNOW YOUR REMOTE

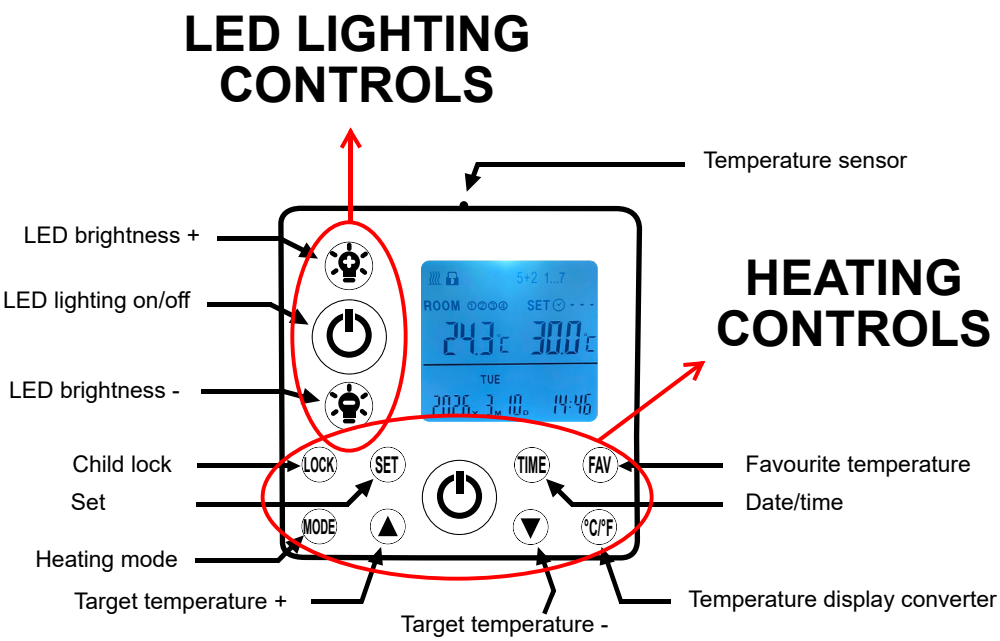

DO NOT PLACE THE REMOTE WITHIN THE HEAT SPREAD

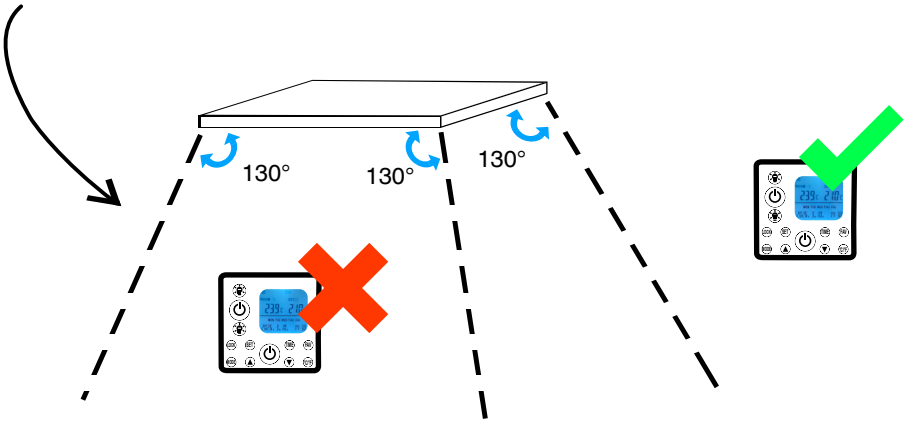

THE LED LIGHTING CANNOT BE PROGRAMMED OR CONTROLLED BY ANY OTHER CONTROLLER

HOW TO PAIR YOUR REMOTE

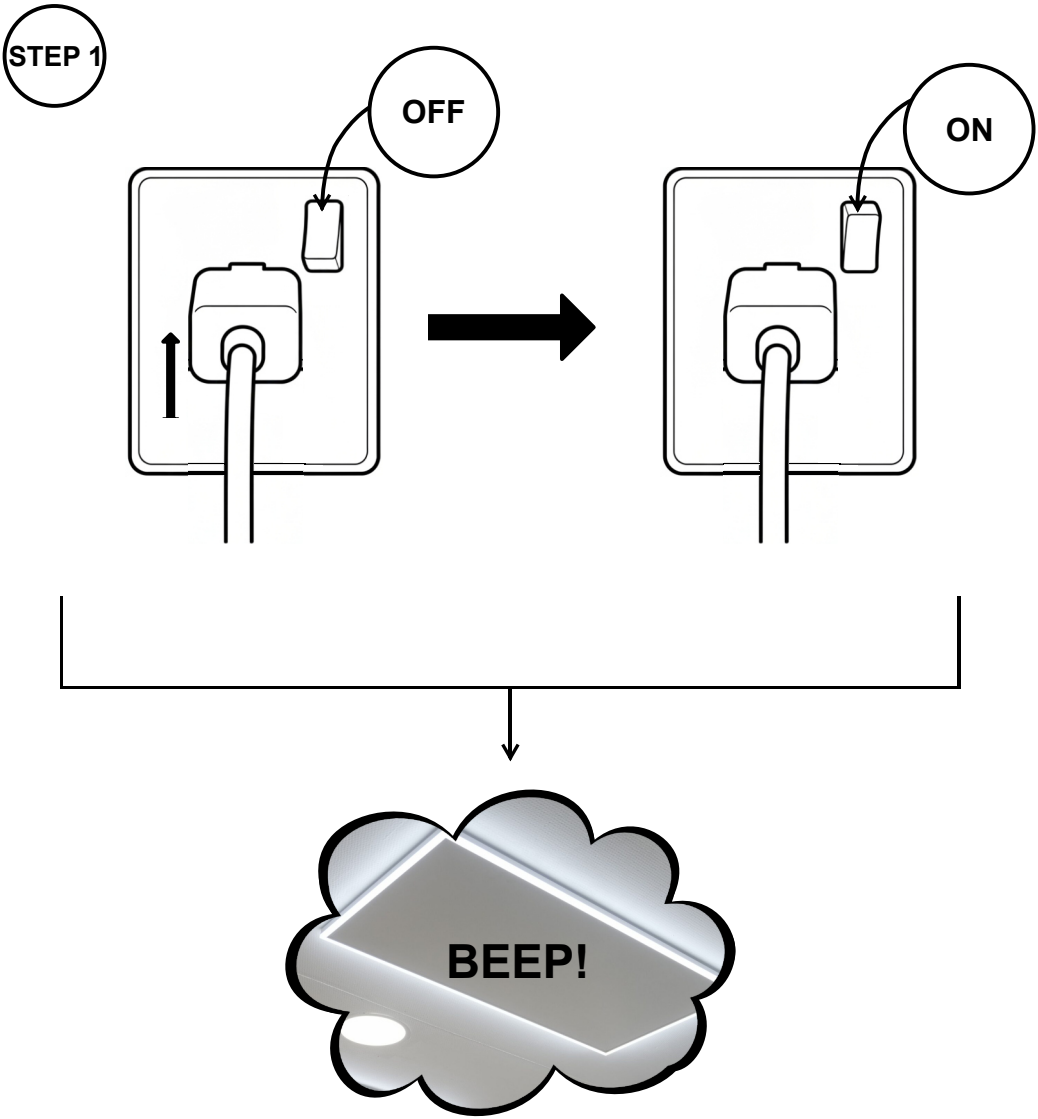

IMPORTANT

1 Before pairing/re-pairing your remote, you must turn the panel **off and back on** at the wall. It will not work if the heater stays on the whole time.

2 One remote can pair to multiple heaters at a time, and we recommend doing this with all compatible heaters in the same room. You can pair them individually or at the same time.

STEP 2

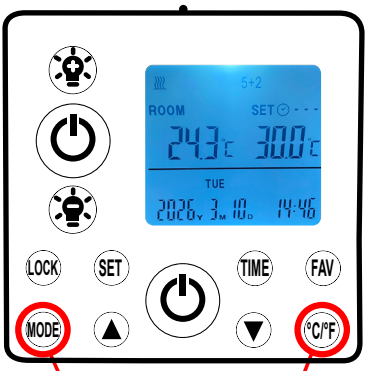

PRESS DOWN TOGETHER AND HOLD



NOTES

1 You must hold down the **°C/°F** and **MODE** buttons as soon as the heater beeps and keep them held down until it beeps again.

2 The screen will turn off when the heater is turned off, but the remote will still be turned on to read the room temperature.

3 The remote must be turned on (with the ON/OFF button) to pair.

HOW TO PROGRAM YOUR CONTROLLER

1 Hold down **MODE** and **TIME** together to change between 5+2 and 1-7 programming.

5+2 PROGRAMMING

Used to program 4 time slots that repeat every weekday and 4 separate time slots that repeat every Saturday and Sunday

1-7 PROGRAMMING

Used to program 2 time slots that repeat every day of the week

HOW TO SET THE TIME

1 Hold **TIME** until the screen flashes then use the **ARROW** buttons to adjust the year. Press **TIME** to move on to setting the month, then the day and finally the time.

HOW TO PROGRAM YOUR HEATER IN 5+2 MODE

1 To program your heater, you must set an **ON-TIME**, an **OFF-TIME** and then the **TEMPERATURE** for 4 time slots.

2 You can hold **MODE** to activate/deactivate your set timings.

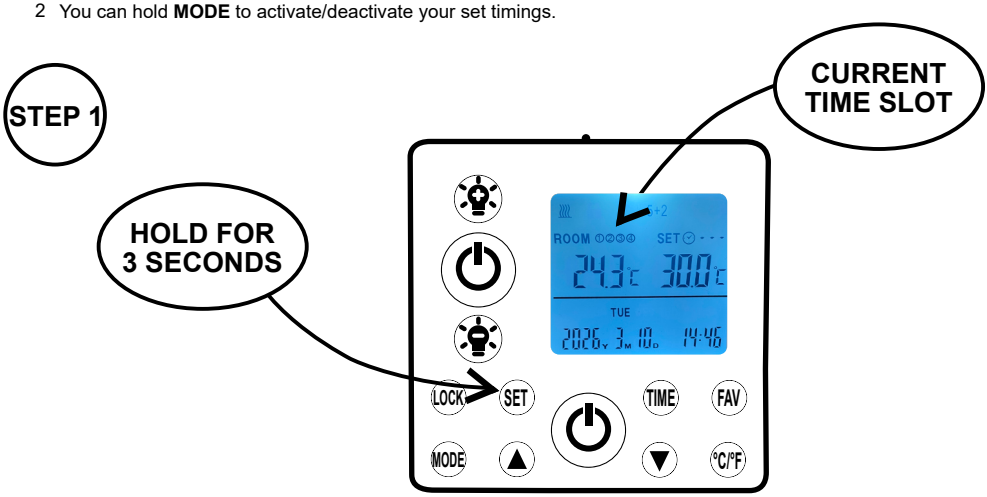

STEP 2

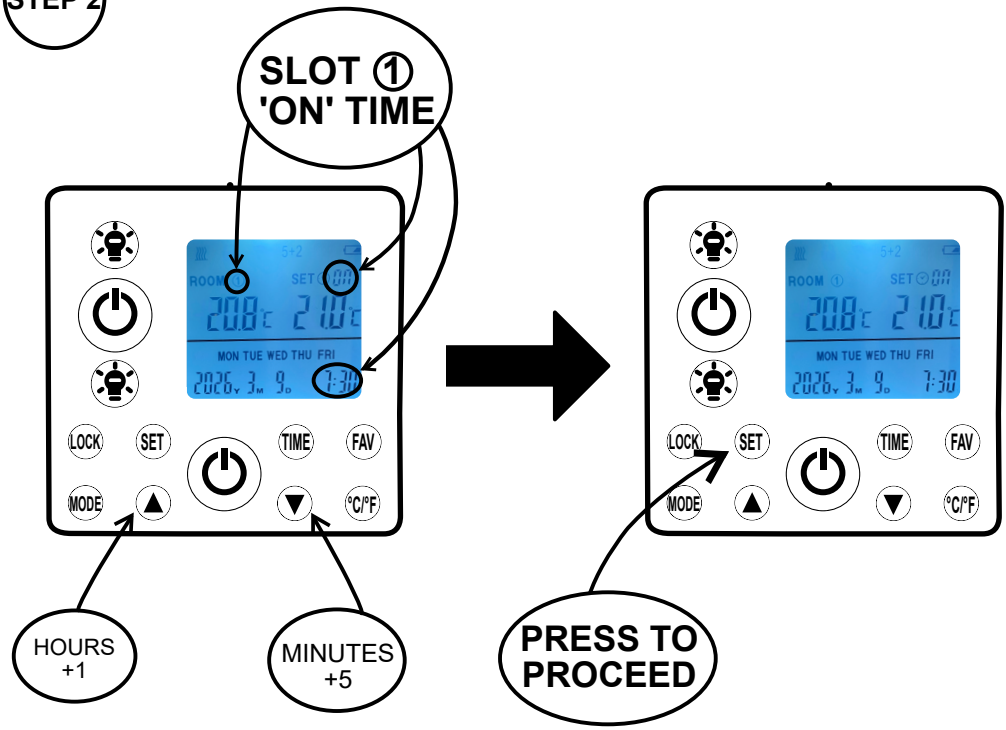
SLOT ①
'ON' TIME
ROOM ①
SET ON
20.8°C 21.0°C
MON TUE WED THU FRI
2026. 3. 9. 7:30
LOCK
SET
TIME
FAV
MODE
°C/°F
HOURS
+1
MINUTES
+5
PRESS TO
PROCEED

STEP 3

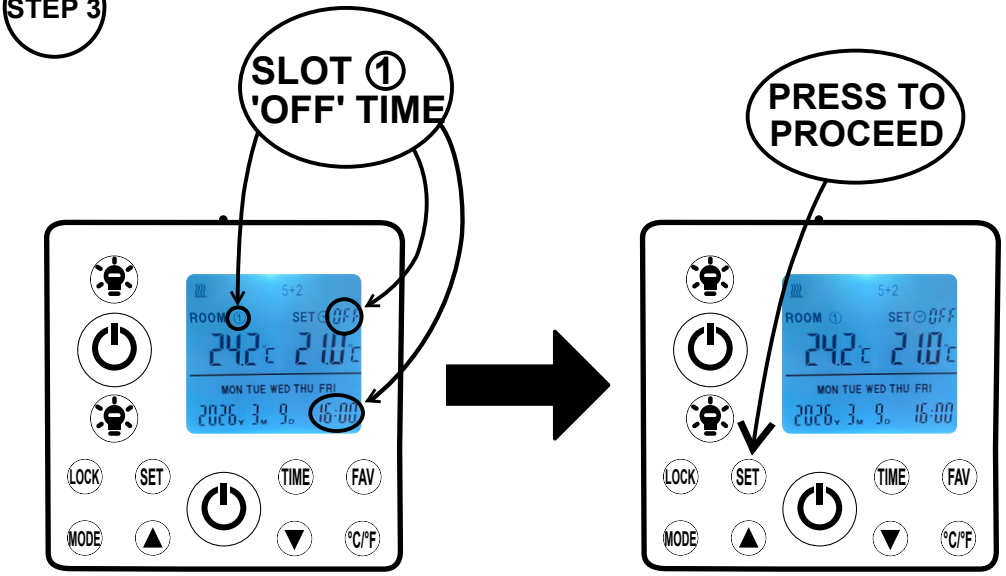
SLOT ①
'OFF' TIME
PRESS TO
PROCEED
ROOM ①
SET OFF
24.2°C 21.0°C
MON TUE WED THU FRI
2026. 3. 9. 16:00
LOCK
SET
TIME
FAV
MODE
°C/°F

STEP 4

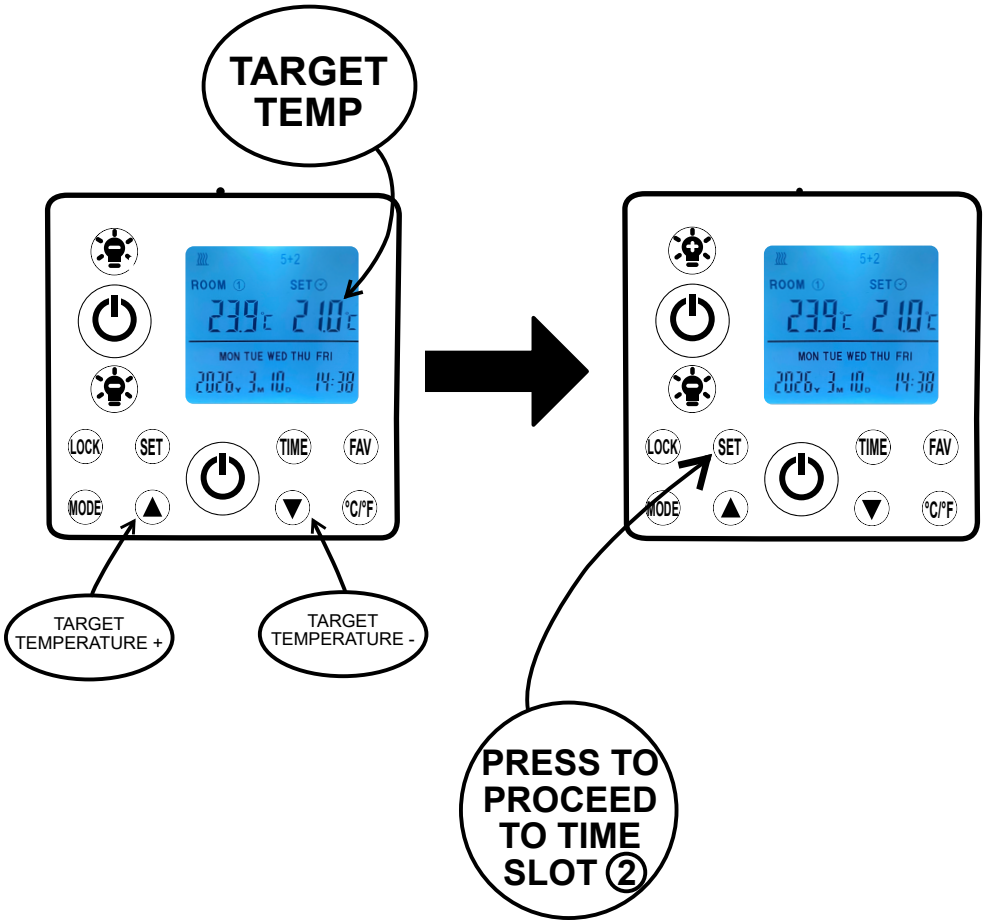

HELPFUL TIPS

1 Repeat steps 2 - 4 to program timings for time slots ② – ④ .

2 Press **SET** after programming time slot ④ to move on to programming the weekend, which is done the same way by repeating steps 2 - 4.

3 Ensure that all timings are set to start before their end times and ensure that no time slots overlap as they will cancel out, and the heater will not turn on.

4 The default timings must be changed or else your programming will not be valid.

5 Adjusting the temperature while in an active time slot will not ruin anything. It will adjust the target temperature temporarily before reverting back to normal at your next time period.=

HOW TO PROGRAM YOUR HEATER IN 1-7 MODE

1 To program your heater, you must set an **ON-TIME**, an **OFF-TIME** and then the **TEMPERATURE** for 2 time slots.

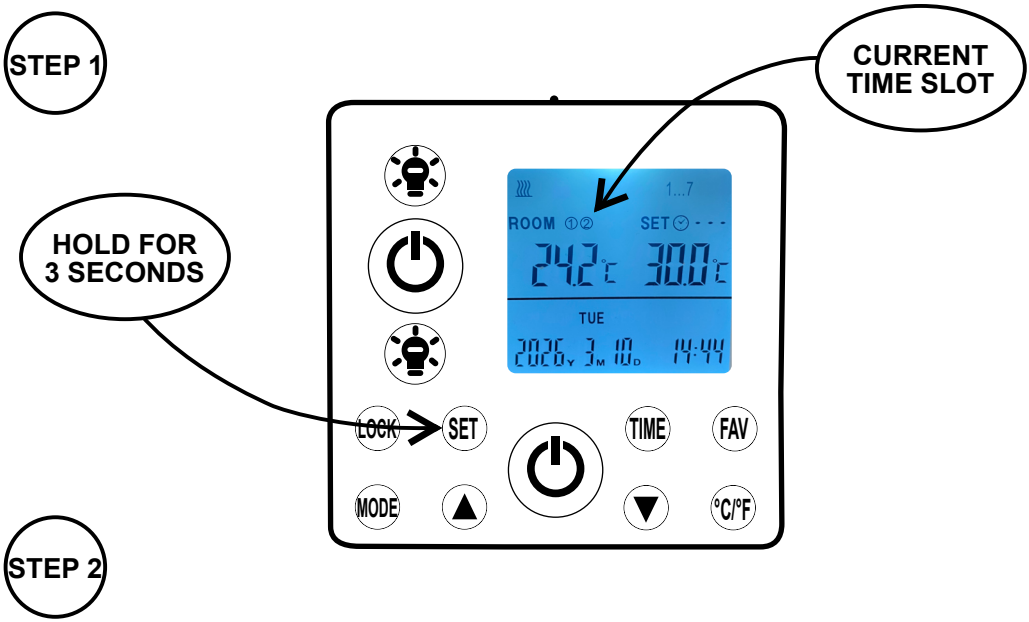

FOLLOW STEPS 2 - 4 AS SHOWN ON PAGE 8/9

ADDITIONAL NOTES

1 There are only 2 time periods available when in 1-7 programming.

2 All settings must be re-entered after replacing the batteries in the remote.

3 Avoid covering the temperature sensor at the top of the remote because this will impact the temperature reading.

4 Ensure the remote stays out roughly 3 metres away from the heater, and is never placed in a drawer while in use.

5 Remove the batteries if the heater is inactive for long extended periods.

IF YOU HAVE ANY TECHNICAL ISSUES OR IF YOU HAVE ANY QUESTIONS WHILST SETTING UP YOUR HEATER, PLEASE GET IN TOUCH.

HOW TO CONTROL THE LED LIGHTING

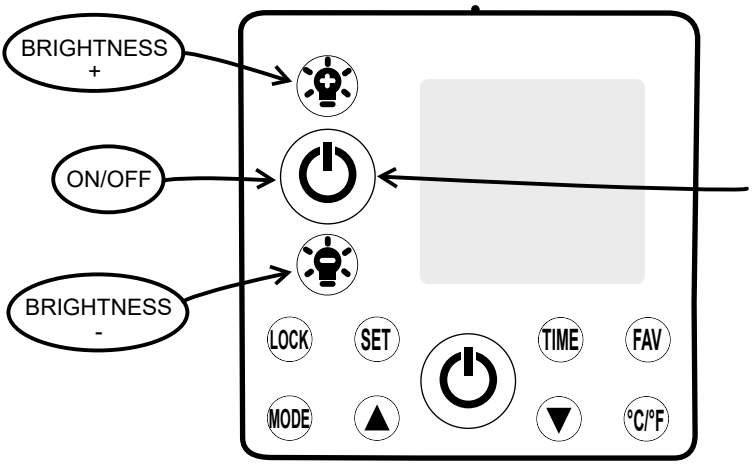

FAQ / TROUBLESHOOTING

WHY WON'T MY HEATER TURN ON/OFF?

1. If you have set timings, check that none of them overlap and that they are correct, as they will completely stop the heater from operating.
2. This is normal if the **SET** temperature is above the current **ROOM** temperature.
3. You need to accurately set the **TIME** for your programming to work correctly.

WHY ISN'T MY REMOTE WORKING?

1. Turning the heater on at the wall makes it enter 'pairing mode' where it can connect to the remote. This only lasts for a little while, so it may time out before you are able to connect.
2. The remote must be turned on to connect to the heater. Press **ON/OFF** before pairing your remote to first turn it on.
3. The remote must be kept within 8m of the heater to pair with and control the heater.
4. If you see the battery symbol on your remote, you will need to change the batteries.

CAN I CONTROL MY HEATER WITH WIFI?

1. This particular heater can only be programmed via the handheld remote or through an external thermostat. It is not compatible with WiFi controls.
2. We do not recommend using an external thermostat with this heater as it cannot operate without the handheld thermostat.

DO I LEAVE MY REMOTE TURNED ON?

1. Ensure that the remote stays **ON** in a position where it can accurately read the room temperature, whether you have programmed timings or just want to maintain a temperature.

CAN I PROGRAM THE LED LIGHTING?

1. The LED lighting cannot be programmed using the controller or an external controller, you can only adjust the brightness and shade as and when you'd like using the handheld remote.

REMOTE FUNCTIONS

1. The remote has an inbuilt temperature sensor at the top to detect the air temperature.
2. The remote will tell the heater to turn on/off when it is 0.5°C above/below the target temperature.
3. Hold down the **LOCK** button for 3 seconds to activate/deactivate the lock.
4. Hold the **TIME** button for 3 seconds to set the year, month, date and time with the arrow buttons.
5. Hold the **FAV** button for 3 seconds and use the arrows to choose your favourite temperature. Pressing **FAV** from now on will now quickly change the target temperature to be your favourite temperature.
6. When the remote detects a sudden large decrease in temperature, it will activate **Open Window Mode** and automatically turn the heater off to not waste power while the room is being cooled

---

PLEASE NOTE

1. This heater can be plugged directly into a socket if located above/nearby the unit.
2. This heater can be hardwired to the consumer board (warranty not voided if done by a qualified electrician)

IF YOU HAVE ANY QUESTIONS, PLEASE GET IN TOUCH.

PARTS FOR INSTALLATION

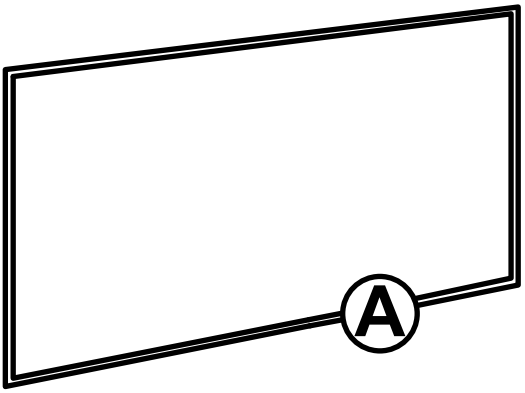

1x Heater

B

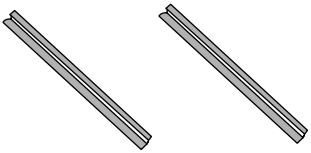

2x Hanging Hooks

F

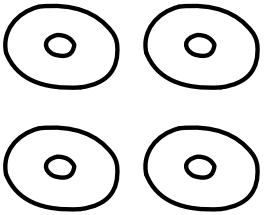

4x Washers

C

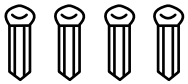

4x Metal Expansion Screws

G

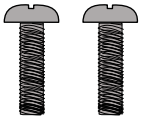

2x Screws

D

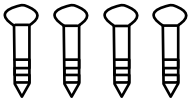

4x Screws

H

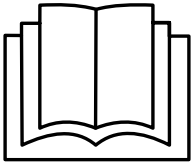

1x Manual

E

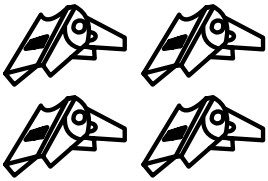

4x Spring Toggles

INSTALLATION METHOD

STEP 1

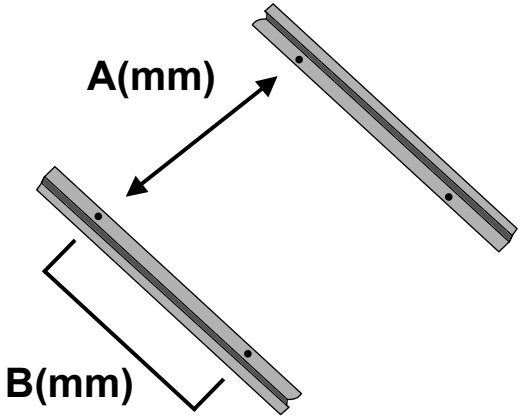

Panel Size/mm	Screw Distances
655*630	A= 495mm B= 100mm
1080*630	A= 495mm B= 300mm
1280*630	A= 495mm B= 300mm

STEP 2

CEILING

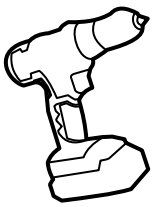

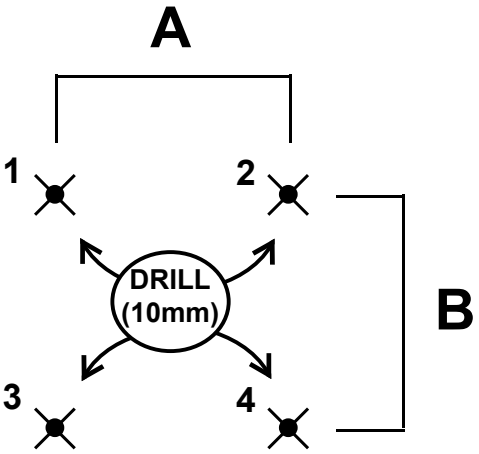

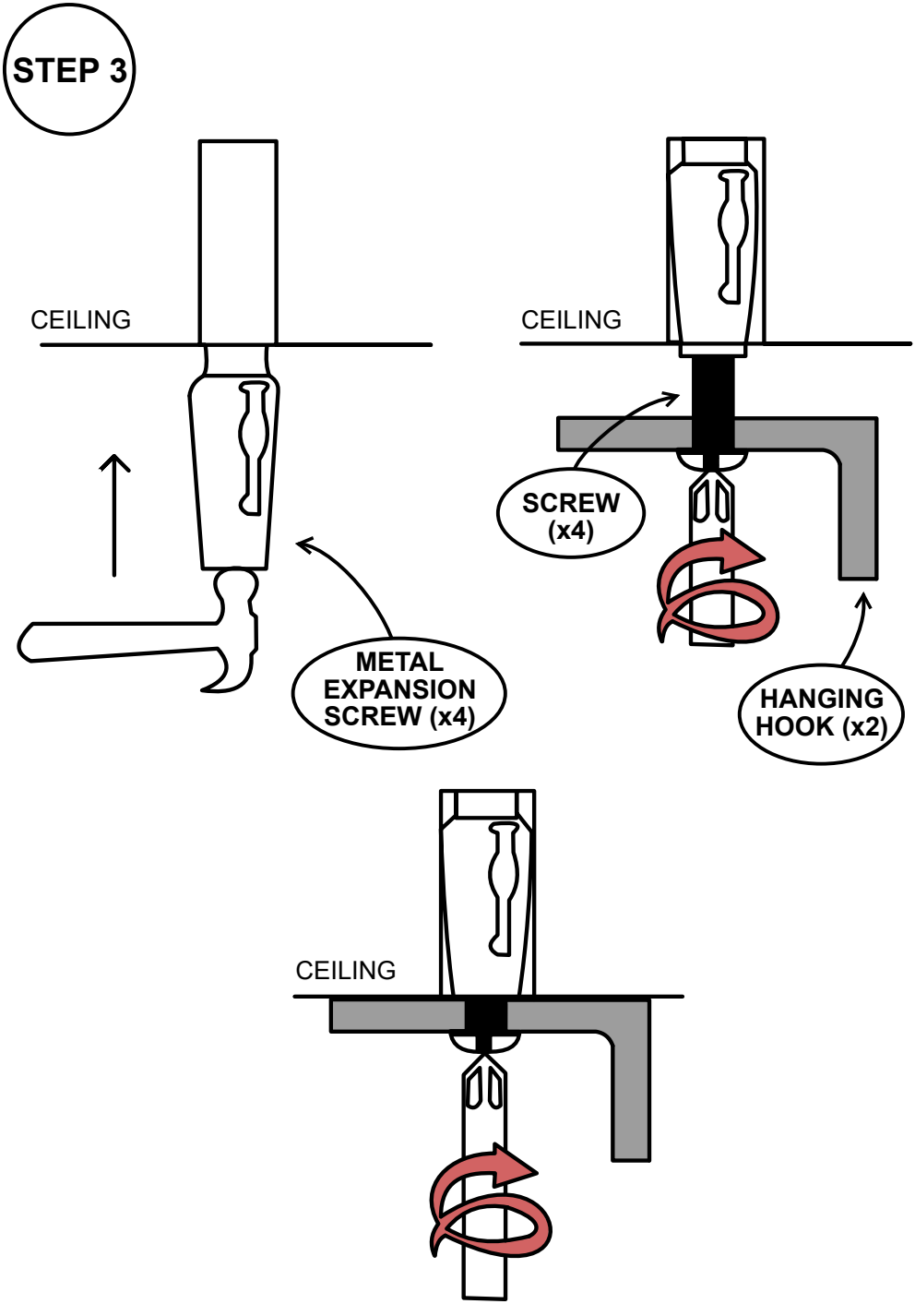
STEP 3
CEILING
METAL EXPANSION SCREW (x4)
CEILING
SCREW (x4)
HANGING HOOK (x2)
CEILING

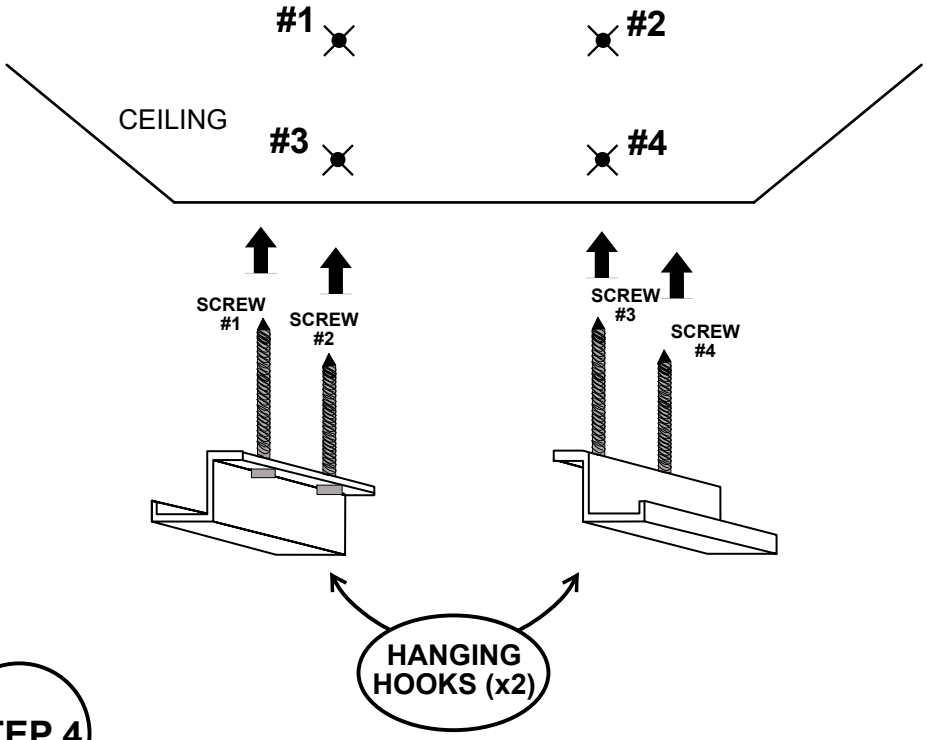
#1
#2
CEILING
#3
#4
SCREW #1
SCREW #2
SCREW #3
SCREW #4
HANGING HOOKS (x2)

STEP 4

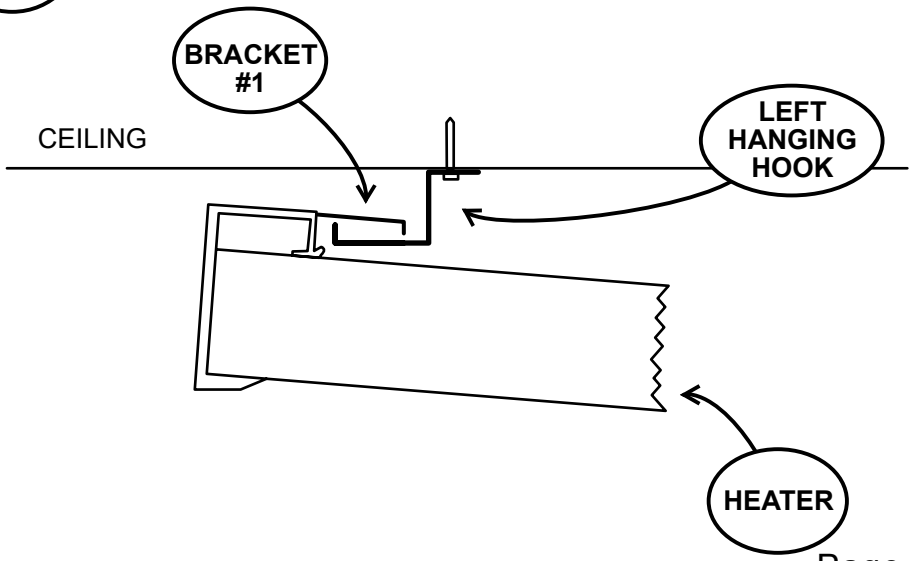
BRACKET #1
CEILING
LEFT HANGING HOOK
HEATER

STEP 5

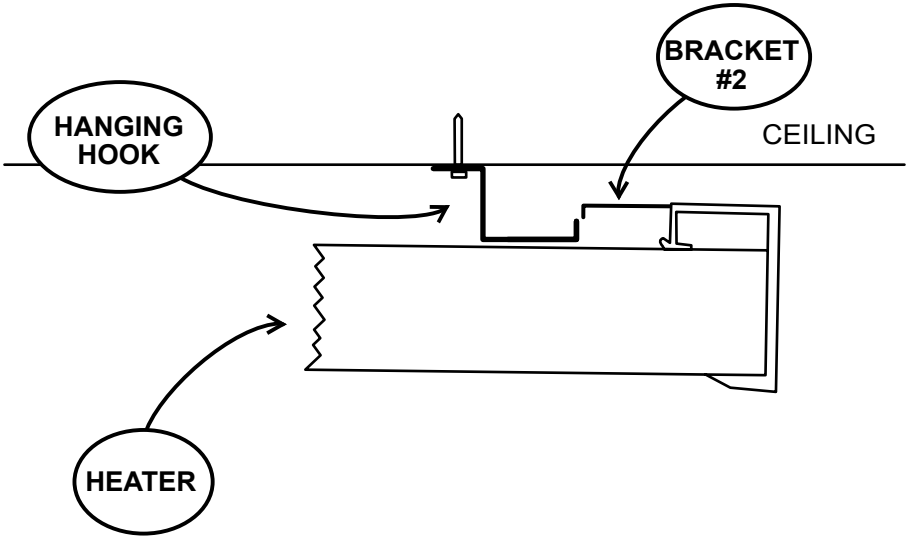

STEP 6

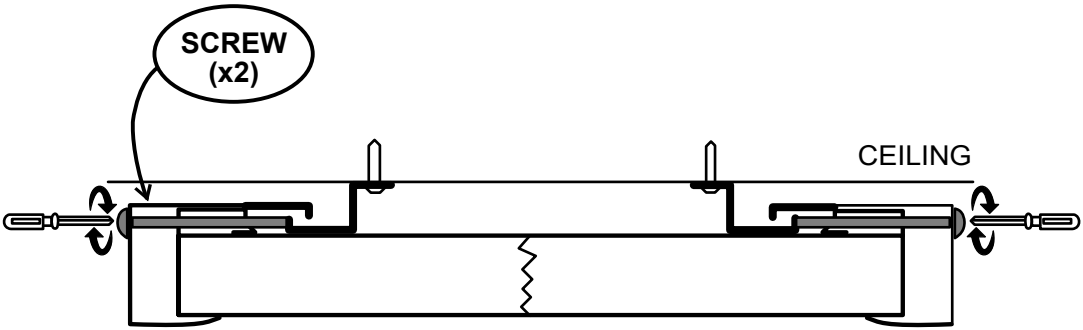

1800mm MINIMUM MOUNTING HEIGHT

GYPSUM BOARD INSTALLATION METHOD

1 This method is intended for gypsum boards and wooden ceilings between 9mm and 18mm in thickness.

2 For wooden ceilings thicker than 18mm, use metal expansion tubes or use your own carpentry nails, ensuring the carpentry nails meet or exceed M5*40mm in size.

STEP 1

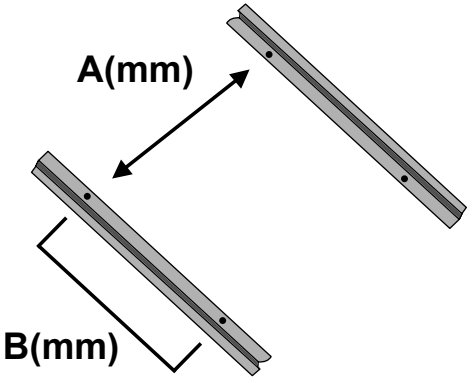

Panel Size/mm	Screw Distances
655*630	A= 495mm B= 100mm
1080*630	A= 495mm B= 300mm
1280*630	A= 495mm B= 300mm

STEP 2

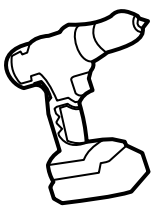

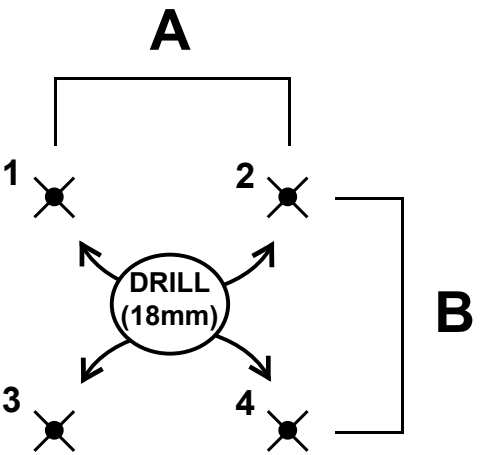

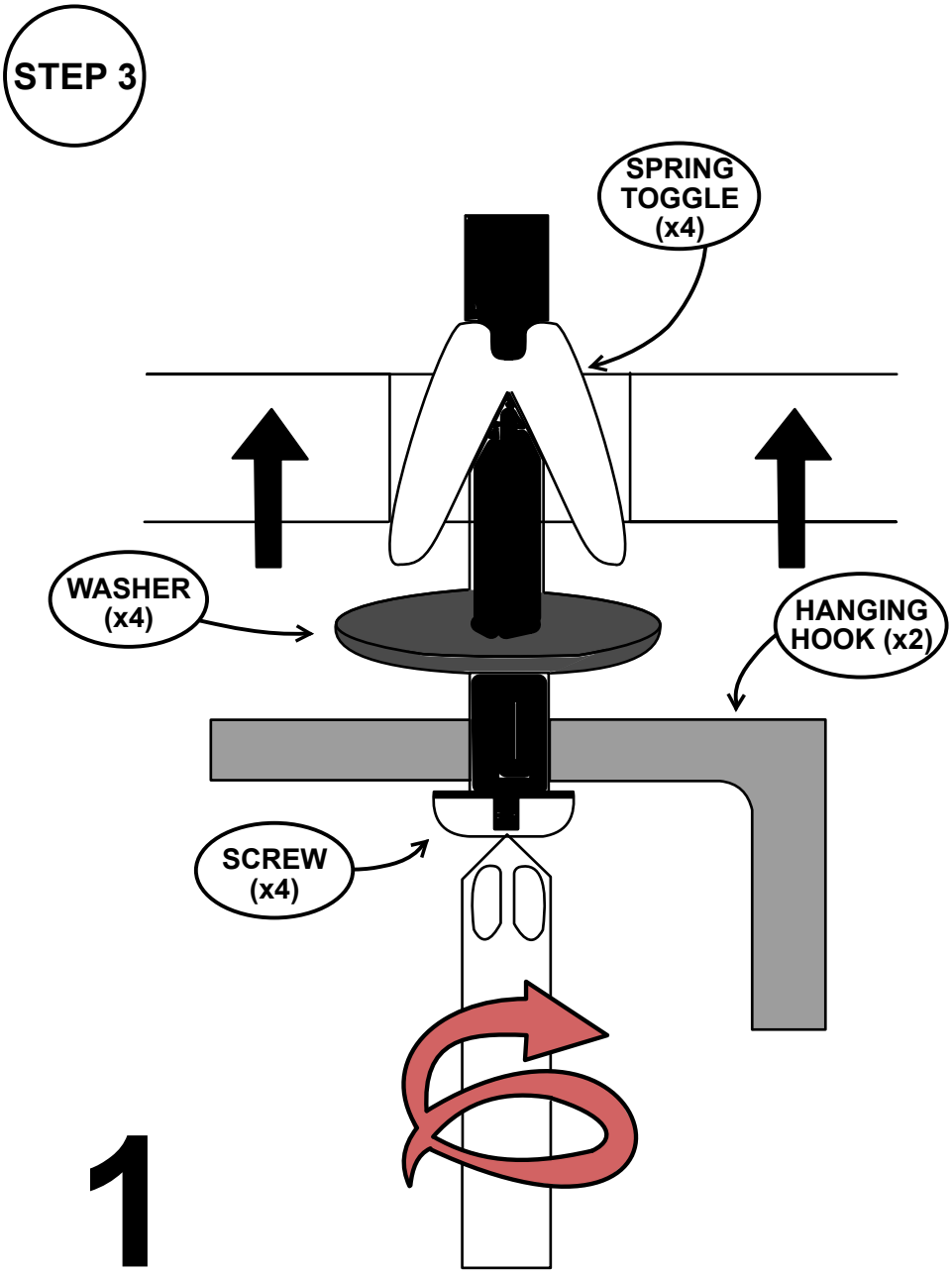
STEP 3
SPRING TOGGLE (x4)
WASHER (x4)
HANGING HOOK (x2)
SCREW (x4)
1

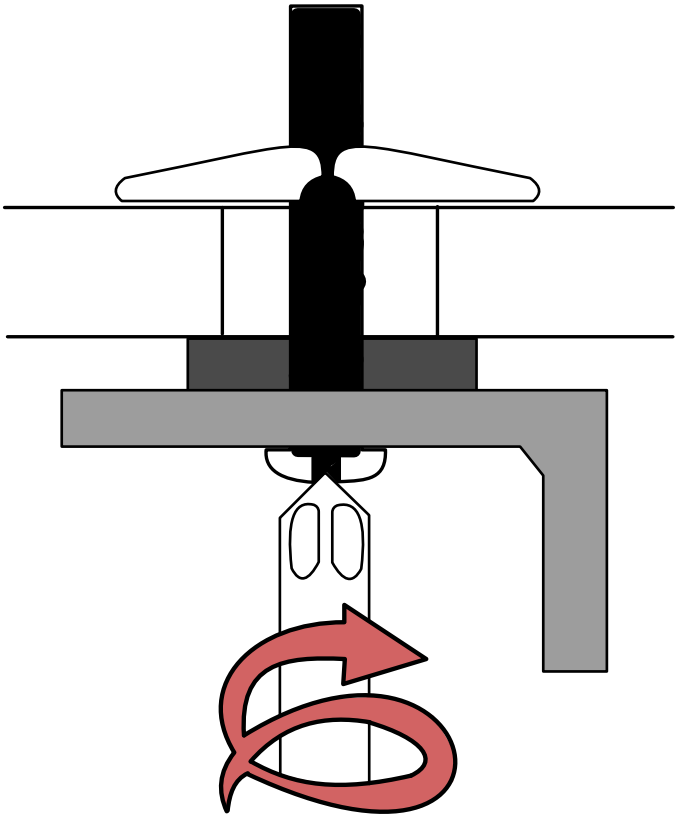

2

STEP 4

FOLLOW STEPS 4 - 6 ON PAGES 15 - 16

TECHNICAL DATA FOR THE INTERNAL RECEIVER

Power Supply: AC220-240V, 50/60 Hz

Standby Power Consumption: 0.4W

TECHNICAL DATA FOR THE REMOTE CONTROLLER

1 Power Supply: DC 4x 1.5V AAA batteries (not included)

2 Set Temperature Range: 5°C - 35°C, resolution: 1°C

3 Room Temperature Range: 0°C - 50°C, display resolution: 0.1°C

TECHNICAL DATA FOR THE REMOTE CONTROLLER

4 Temperature Reading Accuracy: 0.5°C

5 Working Environment Range: 1°C - 50°C

6 Radio Frequency: 433.92MHz

TECHNICAL DATA FOR THE HEATING UNIT

Voltage	220 - 240V/50Hz
Heating element	Carbon
Wavelength	8-14μ
Surface temperature	130°C-150°C
Electricity efficiency	98.5%
Life expectancy (hours)	75,000
Surface material	Aluminium
IP rating	IP20
Overheat protection	Yes
Power cord length	1.8m + UK Plug
Installation	Ceiling

TECHNICAL DATA FOR THE LED LIGHT

	Lumens	Kelvins	Wattage
Cool Light	1978.8	6552K	17.58W
Warm Light	2026.4	2859K	17.49W
Neutral Light	3886.6	4100K	34.53W

THIS MANUAL IS APPLICABLE FOR:

LSH370W / LSH660W / LSH800W